StrongArm™ ML10

BLUE GIANT®

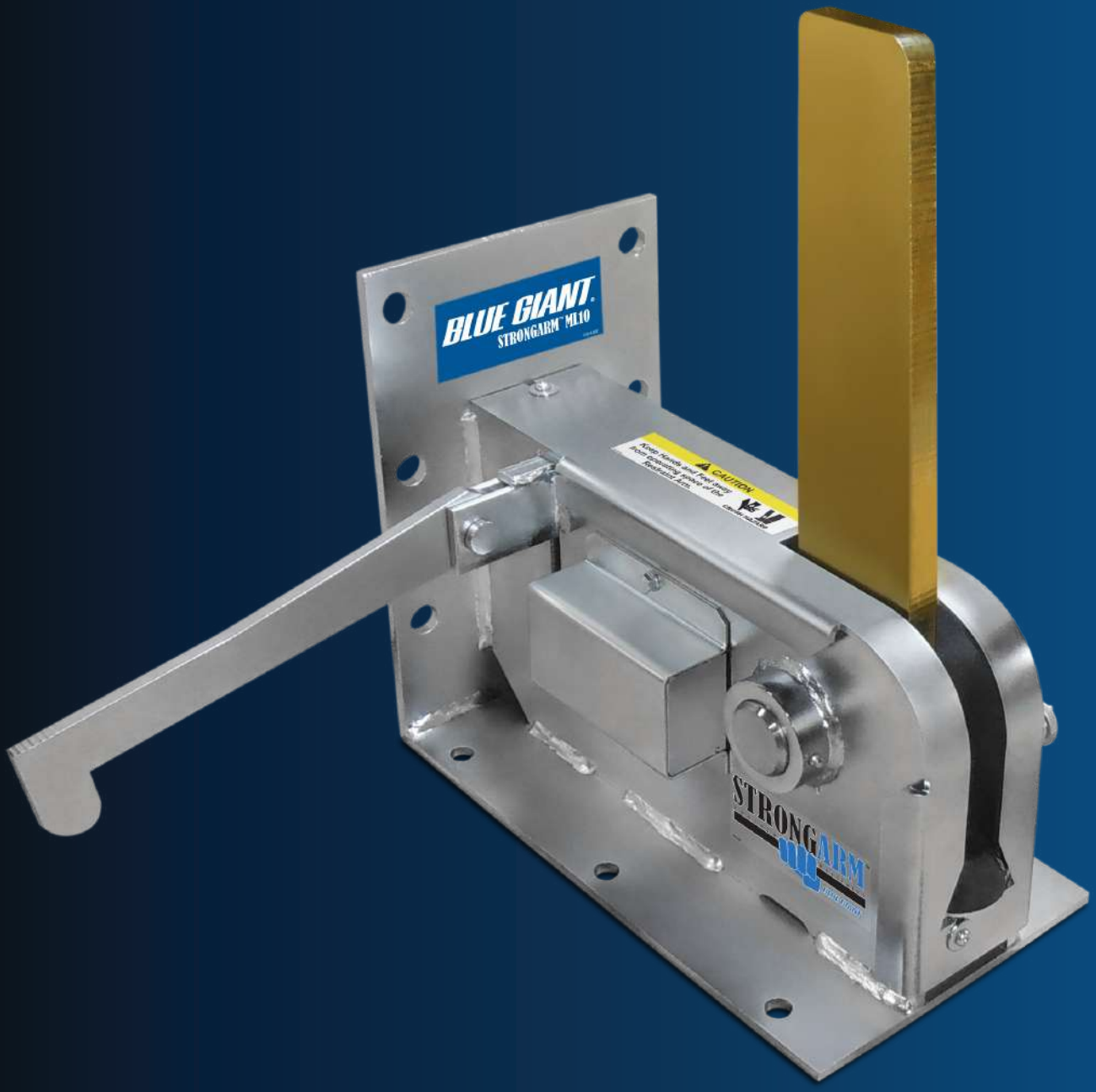

STRONGARM™
Vehicle Restraint

VEHICLE RESTRAINT SYSTEM

BUILT STRONG • HOLDS STRONG

StrongArm™ ML10

BLUE GIANT®

STANDARD FEATURES

A **Built to Last:** Dual finish trivalent dichromate zinc-plated steel housing protects internal components from collision damage, corrosion, and rusting.

B **Housing Profile:** 10 ¾" (273mm) above grade and complies with NHTSA guidelines.

C **High Visibility Barrier Arm:** Mechanical arm secures ICC bars from 11" to 26" (279mm–660mm) above grade.

D **Wall or Ground Mounted Body Assembly:** Strong anchor framed bracket with 13" (330 mm) back plate.

E **PosiLock™ Securing Technology:** Mechanical locking system holds trailers without applying damaging pressure to the deployment mechanism.

F **Easy Grip Control Rod:** (not shown) Engage and release the ML10 while standing on the dock, no bending or lifting required.

Many parts may be interchangeable with similar models.
Optional features shown.
† Sizes are not to scale.

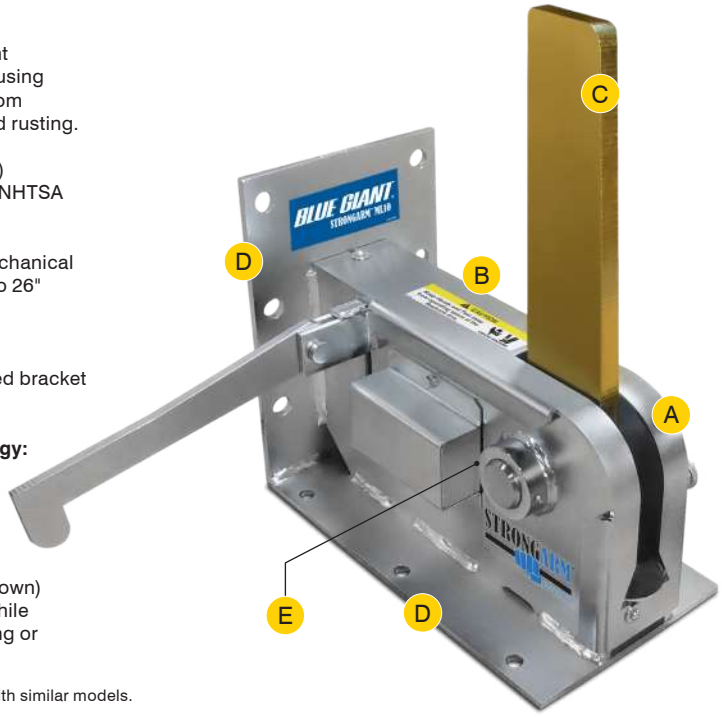

†

G **Automatically Actuated Lights Communication System:** Interlocked dock safety system consists of a NEMA4X control box, proximity sensor, and red / green interior and exterior LED lights. Also includes driver warning sign.

Approved American National Standard ANSI Complies with ANSI MH30.3 standard

Holds Strong

- The StrongArm™ ML10 uses 30,000lbs (13,636kgs) of restraining force to prevent premature truck departure during loading and unloading. The unit can be left in the locked position overnight to discourage trailer theft.
- Complies with ANSI MH30.3 Standard.

Easy to Operate

- The manually operated ML10 is engaged and released by a single detachable control rod. The risk of employee strain or injury is significantly reduced, because no bending or lifting is required.

Non-Impact Operation

- ICC bars (a.k.a. RIG bars or underride guards) are secured via passive engagement, creating less wear and tear on the restraint components and consequently lowering maintenance requirements.
- With a vertical restraining range of 11" to 26" (279 mm to 660mm) above ground and horizontal reach of 13" (330mm), the ML10 is compatible with virtually all modern trucks and trailers, even those with air-ride suspension systems.

No Power Necessary

- Certain applications, such as chemical handling facilities or grain storage locations, involve explosive substances and require limited interaction with electrical devices. The ML10 keeps their loading docks safe because of its completely mechanical operation: no control panel or electrical wiring.

The Next Level

- The ML10 system can be upgraded to include a manual or automatic lights communication package for added safety at the loading dock.
- The TLC24-M has interior and exterior LED signal lights (red / green) that are manually controlled to communicate safety conditions to both dock workers and truck drivers.
- The advanced TLC24-A has all the benefits of the TLC24-M but also detects the position of the restraint via a sensor, allowing the lights to automatically change according to the relevant safety condition.

BLUE GIANT®
BLUE GIANT EQUIPMENT CORPORATION

Corporate 85 Heart Lake Road South
Brampton, ON, Canada L6W 3K2
t 905.457.3900 **f** 905.457.2313

USA 6350 Burnt Poplar Road
Greensboro, NC 27409
www.BlueGiant.com

VR-ML10-013015

Blue Giant offers a full line of dock levelers, dock safety equipment, seals and shelters, accessories, ergonomic and scissor lift equipment and industrial trucks. Concurrent with our continuing product improvement program, specifications are subject to change without notice. Please contact Blue Giant for latest information. Some features illustrated may be optional in certain market areas.

© Copyright Blue Giant Equipment Corporation 2015